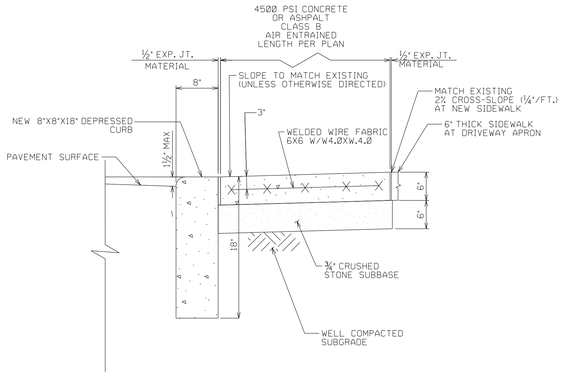

DRIVEWAY APRON SECTION

NOT TO SCALE

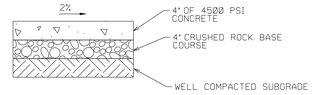

NOTES:
ALL SIDEWALKS SHALL HAVE A 2% CROSS SLOPE AWAY FROM PROPERTY AND TOWARDS CURB LINES.

SECTION A-A

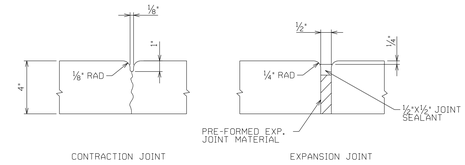

NOTES:
1. CONTRACTION JOINTS TO BE LOCATED AT 4'-0" CENTERS PERPENDICULAR TO THE LONGITUDINAL AXIS OF SIDEWALK.
2. EXPANSION JOINTS TO BE LOCATED EVERY 20'-0".

DETAIL A

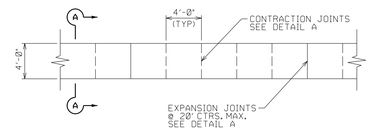

CONCRETE SIDEWALK

NOT TO SCALE

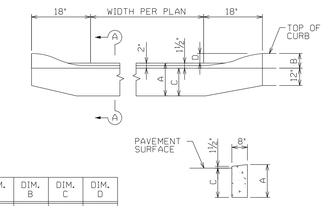

CURB SIZE	DIM. A	DIM. B	DIM. C	DIM. D
8"	18"	6"	16½"	4½"

SECTION A-A

DEPRESSED CURB

NOT TO SCALE

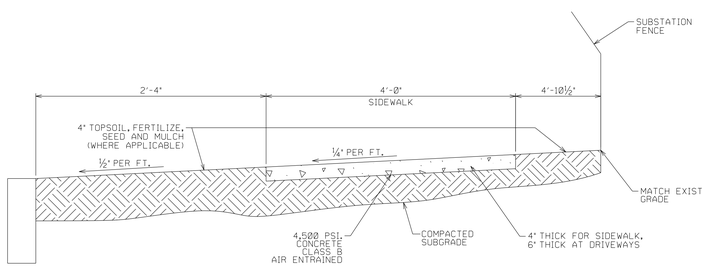

CONCRETE SIDEWALK SECTION ALONG PINE STREET

NOT TO SCALE

NOTES:
1. ½" EXPANSION JOINTS SHALL BE INSTALLED IN THE SIDEWALK AT 20 FT. SPACING. PREMOLDED JOINT MATERIAL MUST BE CUT ¼" BELOW THE TOP OF CONCRETE.
2. ¼" TRANSVERSE JOINTS SHALL BE INSTALLED AT SPACING EQUAL TO THE SIDEWALK WIDTH.
3. PERIMETER EDGING OF SIDEWALK BLOCKS, I.E., "WINDOWPANE FINISH" IS NOT TO BE DONE.

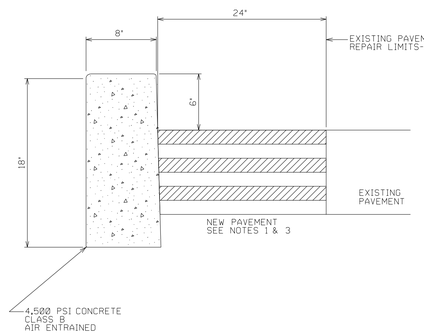

NOTES:
1. WHEN NEW CURB IS CONSTRUCTED ALONG AN EXISTING PAVED AREA, THE EXISTING PAVEMENT SHALL BE SAWCUT IN A STRAIGHT LINE PARALLEL TO FACE OF NEW CURB. THE COST OF SAWCUTTING IS TO BE INCLUDED IN THE UNIT BID PRICE. THE EDGE OF EXISTING ASPHALT SHALL BE TACKED AND THE JOINT WITH THE NEW PAVING SHALL BE SEALED. REPAIR OF ASPHALT PAVING WITH COLD PATCH IS NOT ACCEPTABLE.
2. PREMOLDED ½" WIDE EXPANSION JOINTS SHALL BE INSTALLED IN THE CURB 20' APART AND BE RECESSED ¼" FROM FACE AND TOP OF CURB. EXPANSION JOINTS TO BE INCLUDED IN PRICE BID FOR CURB. CONSTRUCTION JOINT SHALL BE CUT MID-POINT BETWEEN EXAPANSION JOINTS.
3. CURBING AND PAVING SHALL BE IN ACCORDANCE WITH BOROUGH OF LAWNSIDE REQUIREMENTS.

8"X18" VERTICAL CONCRETE CURB

NOT TO SCALE

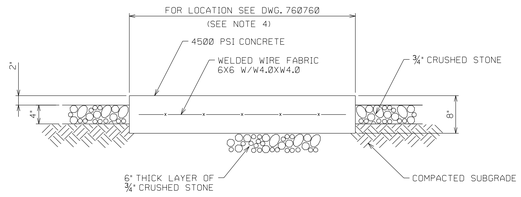

BUILDING ENTRANCE SLAB DETAIL

SCALE: ¼" = 1'-0"

NOTES:
1. SLAB FOR ROLL-UP DOOR ENTRANCE TO BE 10'X16'.
2. SLABS FOR DOORWAY ENTRANCES TO BE 4'X4'.
3. SLAB EDGES ADJACENT TO BUILDING TO HAVE ¼" THICK X8" DEEP PRE-MOULDED EXPANSION JOINTS FOR FULL WIDTHS. TOP OF SLABS TO BE SET ¼" BELOW BUILDING FINISHED FLOOR ELEVATIONS AND BE SLOPED ⅛"/FT. AWAY FROM BUILDING.
4. 5'-0" X 5'-0" CENTERED ON PERSONNEL DOORS AND 10'-0" X 16'-0" CENTERED ON ROLL-UP DOOR.

NOTES:

1. CONTRACTOR SHALL PROVIDE ALL NECESSARY PIPING, FITTINGS, ADAPTERS, ETC. TO MAKE CONNECTION TO EXISTING WATER SERVICE LINE.
2. EXISTING WATER SERVICE FROM EXISTING CONTROL HOUSE BUILDING TO BE ABANDONED IN PLACE SHALL BE CRIMPED AS CLOSE TO THE WATER MAIN AS POSSIBLE.
3. PIPE SHALL BE SEAMLESS HARD-DRAWN COPPER, ASTM B88, TYPE K.
4. WATER METER SHALL BE INSTALLED IN THE GIS/CONTROL BUILDING AND SHALL HAVE BALL VALVES ON BOTH SIDES OF THE METER.
5. THE INSTALLATION OF WATER METERS SHALL BE REVIEWED AND APPROVED BY THE SUPERVISOR OF THE BOROUGH'S WATER DEPARTMENT.
6. WATER LINES ARE TO BE INSTALLED, DISINFECTED AND PRESSURE TESTED IN ACCORDANCE WITH BOROUGH'S STANDARDS AND SPECIFICATIONS.
7. WATER SERVICE LINES SHALL BE PROVIDED WITH A MINIMUM OF FOUR (4') FEET OF COVER.
8. CONTRACTOR TO DETERMINE EXACT LOCATION OF EXISTING CURB BOX, EXCAVATE LOCATION DOWN TO EXISTING WATER LINE AND CONTACT BOROUGH ENGINEER TO OBSERVE CONDITIONS/LOCATION.

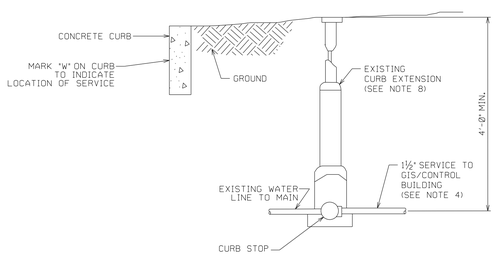

WATER CONNECTION DETAIL

N.T.S.

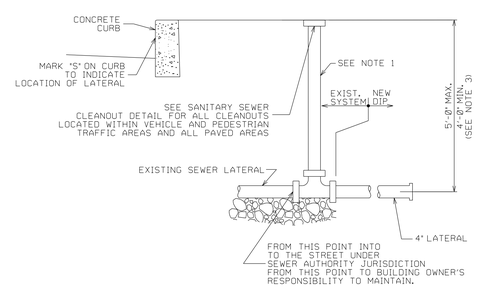

NOTES:
1. CONTRACTOR TO DETERMINE EXACT LOCATION OF EXISTING CURBSIDE RISER BOX, EVACUATE LOCATION DOWN TO EXISTING LATERAL AND CONTACT BOROUGH ENGINEER TO OBSERVE CONDITIONS/LOCATION.
2. 4' MIN. OF COVER FROM FINISHED GRADE TO TOP OF SERVICE AT CURB LINE. DUCTILE IRON PIPE IN AREAS SUBJECT TO VEHICULAR TRAFFIC.
3. ALL CLEANOUTS ALONG LATERAL TO HAVE BRASS PLUGS OF SAME SIZE AS LATERALS.
4. ALL LATERALS MUST BE STRAIGHT RUNS.
5. LATERAL SIZE MUST BE 4" MINIMUM.
6. PROVIDE CLEANOUT AT 75' MAXIMUM SPACING ALONG SERVICE LATERAL.
7. CAP EXISTING CONTROL HOUSE SANITARY SEWER LATERAL CONNECTION AS DIRECTED BY BOROUGH ENGINEER.

LATERAL CONNECTION

NOT TO SCALE

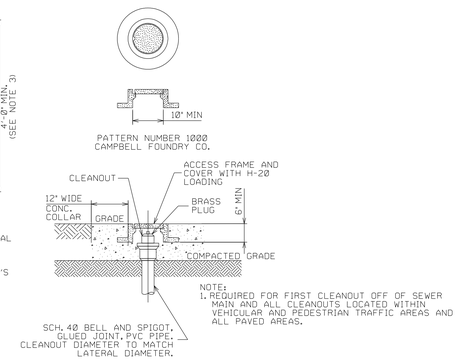

NOTE:
1. REQUIRED FOR FIRST CLEANOUT OFF OF SEWER MAIN AND ALL CLEANOUTS LOCATED WITHIN VEHICULAR AND PEDESTRIAN TRAFFIC AREAS AND ALL PAVED AREAS.

SANITARY SEWER CLEANOUT DETAIL

NOT TO SCALE

SYSTEM CODE: Z140
AREA ELEV.: 642Z

GENERAL NOTES
USE PRINTS OF LATEST REVISION ONLY.
DO NOT SCALE - USE DIMENSIONS ONLY.
FOR LIST OF REFERENCE DRAWINGS SEE DRAWING NO 760764
THIS DRAWING SUPERSEDES NONE
THIS DRAWING IS SHEET NO 1 OF 1 SHEETS.

REV	DATE	DESCRIPTION	PREPARED	REVIEWED	APPROVED
-	-	-	-	-	-
C	09-02-20	COMMENTS INCORPORATED	NP	GP	MDP
B	03-23-20	COMMENTS INCORPORATED	TAI	GP	MDP
A	02-24-20	ISSUED FOR REVIEW	TAI	GP	MDP

NOT FOR CONSTRUCTION

Sargent & Lundy

ANY MODIFICATION OR ADDITION TO THIS DRAWING BY ANY ORGANIZATION OTHER THAN SARGENT & LUNDY IS NOT THE RESPONSIBILITY OF SARGENT & LUNDY

PROJ. No. 13739-103

EUGENE R. PORZIO

N.J. PROFESSIONAL ENGINEER
LIC. NO. 34431
C.O.A. 24GA27971100

NO	DATE	DESCRIPTION	DWN	CKD	EXD	APD
	/ /					
	/ /					
	/ /					
	/ /					
	/ /					
	/ /					

REVISION

LAWNSIDE SUBSTATION

69/13KV SUBSTATION
CIVIL SITE DETAILS
SHEET 3

DETAILS — CIVIL/ENVIR

PSEG

PUBLIC SERVICE ELECTRIC AND GAS COMPANY
ELECTRIC DELIVERY COMPANY - ASSET RELIABILITY, NEWARK N.J.

DRAWN T. INTILI CHECKED G. PORZIO SCALE AS NOTED
DATE 02/24/20 EXAMINED
WBS/SO C.920021.B.11.2.1 APPROVED
SARGENT & LUNDY

760763 A -0

A. YEUNG